VALVES
pressure operated
stainless steel body
with flanges PN40, DIN and ANSI Class 300, DN 15 to 50

U

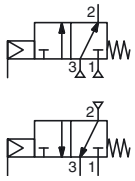

3/2
Series
T398



FEATURES
- *Ruggedly built valve, particularly recommended for use with steam, superheated water, corrosive fluids*
- *High-performance, maintenance-free stuffing box, resistant to thermal shock*
- *Mixer function (two pressure inlets at 1 or 3, one outlet at 2) or distributor function (one pressure inlet at 2, two outlets at 1 and 3)*
- *Vacuum operation up to 10^{-2} mbar*
- *Allowable backpressure: up to 40 bar*
- *Optical position indicator as standard*
- *Autoclavable valve for use at high ambient temperatures (up to 180°C)*
- *The valves satisfy Pressure Equipment Directive 97/23/EC, category 1 (DN > 32) or article 3.3 (DN ≤ 32)*

GENERAL
Differential pressure 0 to 40 bar [1 bar =100 kPa]
Maximum allowable pressure 40 bar (within the specified limits, see diagram I)
Ambient temperature range -25°C to +180°C
Maximum viscosity 5000 cSt (mm²/s)
Pilot fluid Air
Max. pilot pressure 10 bar
Min. pilot pressure See below

fluids (✳)	temperature range	disc seal (✳)
DN 15-20-25: air and gas groups 1 & 2 DN 32-40-50: air and gas group 2 all DN: water, oil, liquids groups 1 & 2 and steam	- 10°C to + 250°C	bronze PTFE

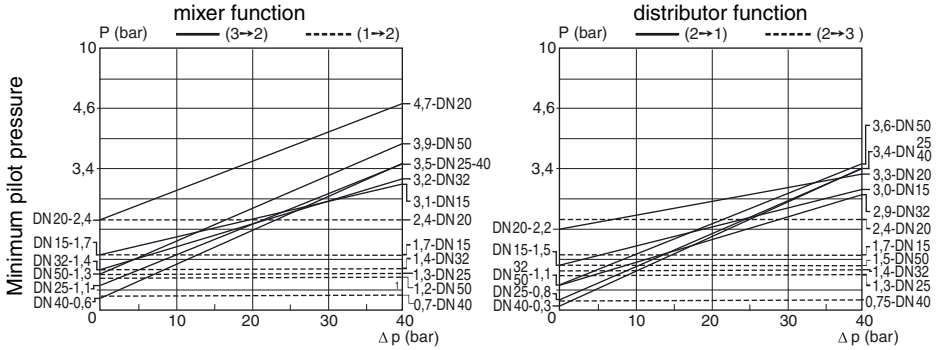

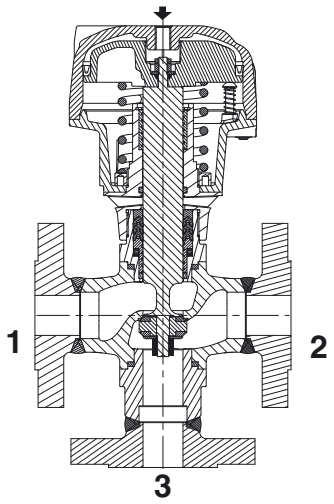

SPECIFICATIONS
Connection Flanges PN40, type 21 (ISO 7005 / EN 1092)
ANSI Class 300 ANSI B16-5
Face-to-face dimensions EN 558-1
Facing Type B

MATERIALS IN CONTACT WITH FLUID
(✳) Ensure that the compatibility of the fluids in contact with the materials is verified
Body and plug Stainless steel
Stuffing box housing Stainless steel
Stem, disc Stainless steel
Stuffing box packing PTFE chevrons
Disc seal Bronze PTFE
Valve body seal Graphite

OTHER MATERIALS
Operator Aluminium, nickel plated

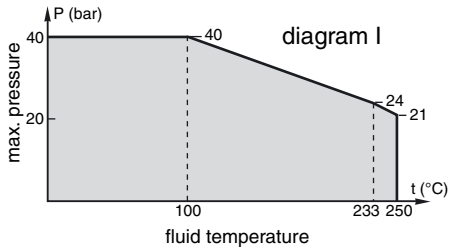

SPECIFICATIONS

DN	orifice size	flow coefficient Kv mixer 3→2		mixer 1→2		distributor 2→3		distributor 2→1		pilot pressure (bar)		operating pressure differential	operator diameter	catalogue number DIN	catalogue number ANSI 300
	(mm)	(m³/h)	(l/min)	(m³/h)	(l/min)	(m³/h)	(l/min)	(m³/h)	(l/min)	min.	max.	(bar)	(mm)		
U - Universal															
15	15	3,3	54	4,4	73	3,5	59	4,6	78	✻	10	40	80	**T398A001**	**T398A007**
20	20	8,0	133	7,4	123	8,1	136	7,7	129	✻	10	40	100	**T398A002**	**T398A008**
25	25	11,4	190	11,6	194	12,1	203	11,9	199	✻	10	40	100	**T398A003**	**T398A009**
32	32	18,9	316	16,6	278	17,9	299	16,6	278	✻	10	40	150	**T398A004**	**T398A010**
40	40	27	450	27	450	27	450	27	450	✻	10	40	150	**T398A005**	**T398A011**
50	50	51	850	51	850	51	850	51	850	✻	10	40	200	**T398A006**	**T398A012**

✻ Minimum pilot pressure varies with differential pressure. See piloting chart above.

F

00180GB-2011/R01
Availability, design and specifications are subject to change without notice. All rights reserved.

Pneutrol International Ltd, 5 Caulside Drive, Antrim, Northern Ireland, BT41 2DU
www.pneutrolvalves.com, sales@pneutrol.com, Tel: +44 (0) 28 9448 1800

OPTIONS AND ACCESSORIES

- Metal-to-metal sealing disc
- Signaling box, with mechanical or inductive contacts
- Low ambient temperatures - Temperature range: -50°C to +70°C
- ATEX 94/9/EC versions for potentially explosive atmospheres, categories 2 GD and 3 GD
- 2 switches, Ex d protection, mounted on valve with 2 Crouzet contacts type 83101-I-W1, for use in ambient temperatures from -20°C to +80°C: suffix **SD2** [Contact us for option with 1 Honeywell contact type 1HS1 (-55°C to +82°C) or 1 Crouzet contact (-20°C to +80°C).]
- Valve seat leakage class VI as defined by FCI 70-2, contact us
- Other pipe connections are available on request

INSTALLATION

- The valves can be mounted in any position without affecting operation
- Compatible with ASTM 1, 2 and 3 oils
- Installation/maintenance instructions are included with each valve

SPARE PARTS KITS

catalogue number	spare parts kit no.		
	piston seal	actuator spring	stem, disc, seals
T398A001/007	**C140233**	**C140299**	**C140323**
T398A002/008	**C140234**	**C140301**	**C140324**
T398A003/009	**C140234**	**C140303**	**C140325**
T398A004/010	**C140235**	**C140305**	**C140326**
T398A005/011	**C140235**	**C140307**	**C140327**
T398A006/012	**C140298**	**C140309**	**C140328**

ORDERING EXAMPLES:

T 398 **A** 003
T 398 **A** 011

pipe thread
basic number

ORDERING EXAMPLES KITS:

C140233
C140298
C140303

basic number

DIMENSIONS (mm), WEIGHT (kg)



TYPE 01-02-03-04
Prefix "T"

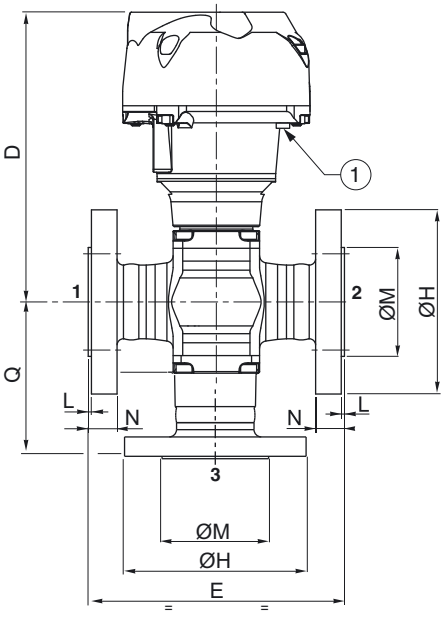

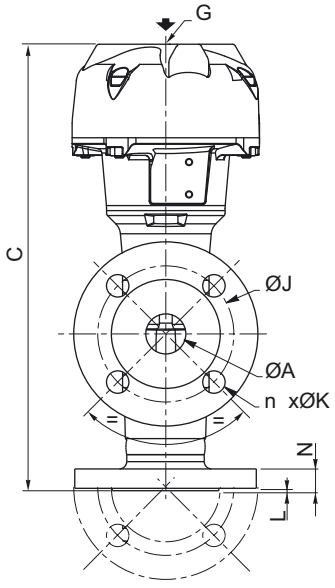

① Optical position indicator

D N 50 - A N S I

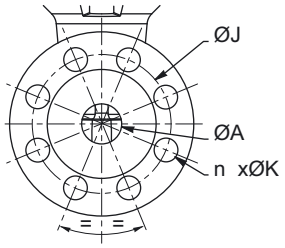

TOP VIEW

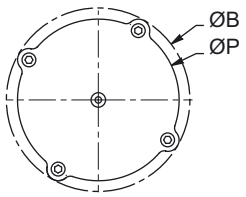

type	DN	operator diameter	weight	
			DIN	ANSI
01	15	80	4,1	3,9
02	20	100	6,7	7,2
	25	100	8,1	8,7
03	32	150	15,1	15,2
	40	150	20,1	20,9
04	50	200	33,9	34,3

type	DN	operator diameter	ØA	ØB	C		D	E		G	ØH		ØJ		n x ØK		L		ØM		N		ØP	Q	
					DIN	ANSI		DIN	ANSI		DIN	ANSI	DIN	ANSI	DIN	ANSI	DIN	ANSI	DIN	ANSI	DIN	ANSI		DIN	ANSI
01	15	80	15	110	225,6	231,5	151,6	130	140	G 1/8	95		65	66,5	4 x 14	4 x 16	2	1,6	45	35	16	14,2	95	75	80
02	20	100	20	132,5	256,9		170,9	150		G 1/8	105	120	75	82,5	4 x 14	4 x 19	2	1,6	58	43	18	15,8	117	86	
	25	100	25	132,5	275,9	280,9	180,9	160	170	G 1/8	115	125	85	89	4 x 14	4 x 19	2	1,6	68	51	18	17,5	117	95	100
03	32	150	32	191	346,2	351,2	237,2	180	190	G 1/4	140	135	100	98,5	4 x 18	4 x 19	2	1,6	78	64	18	19,1	172,5	109	114
	40	150	40	191	396,2		259,2	200		G 1/4	150	155	110	114,5	4 x 18	4 x 22	2	1,6	88	73	18	20,6	172,5	137	
04	50	200	50	247	474		328,5	230		G 1/4	165		125	127	4 x 18	8 x 19	2	1,6	102	92	20	22,4	230	145,5	

00180GB-2011/R02
Availability, design and specifications are subject to change without notice. All rights reserved.